Full Environmental Assessment Form
Part 2 - Identification of Potential Project Impacts

Agency Use Only [If applicable]
Project : EHPD Communications Upgrades
Date : 10/07/18

Part 2 is to be completed by the lead agency. Part 2 is designed to help the lead agency inventory all potential resources that could be affected by a proposed project or action. We recognize that the lead agency's reviewer(s) will not necessarily be environmental professionals. So, the questions are designed to walk a reviewer through the assessment process by providing a series of questions that can be answered using the information found in Part 1. To further assist the lead agency in completing Part 2, the form identifies the most relevant questions in Part 1 that will provide the information needed to answer the Part 2 question. When Part 2 is completed, the lead agency will have identified the relevant environmental areas that may be impacted by the proposed activity.

If the lead agency is a state agency **and** the action is in any Coastal Area, complete the Coastal Assessment Form before proceeding with this assessment.

Tips for completing Part 2:

- Review all of the information provided in Part 1.
- Review any application, maps, supporting materials and the Full EAF Workbook.
- Answer each of the 18 questions in Part 2.
- If you answer "**Yes**" to a numbered question, please complete all the questions that follow in that section.
- If you answer "**No**" to a numbered question, move on to the next numbered question.
- Check appropriate column to indicate the anticipated size of the impact.
- Proposed projects that would exceed a numeric threshold contained in a question should result in the reviewing agency checking the box "Moderate to large impact may occur."
- The reviewer is not expected to be an expert in environmental analysis.
- If you are not sure or undecided about the size of an impact, it may help to review the sub-questions for the general question and consult the workbook.
- When answering a question consider all components of the proposed activity, that is, the "whole action".
- Consider the possibility for long-term and cumulative impacts as well as direct impacts.
- Answer the question in a reasonable manner considering the scale and context of the project.

1. Impact on Land
Proposed action may involve construction on, or physical alteration of, the land surface of the proposed site. (See Part 1. D.1) ☐ NO ☑ YES
If "Yes", answer questions a - j. If "No", move on to Section 2.

	Relevant Part I Question(s)	No, or small impact may occur	Moderate to large impact may occur
a. The proposed action may involve construction on land where depth to water table is less than 3 feet.	E2d	☑	☐
b. The proposed action may involve construction on slopes of 15% or greater.	E2f	☑	☐
c. The proposed action may involve construction on land where bedrock is exposed, or generally within 5 feet of existing ground surface.	E2a	☑	☐
d. The proposed action may involve the excavation and removal of more than 1,000 tons of natural material.	D2a	☑	☐
e. The proposed action may involve construction that continues for more than one year or in multiple phases.	D1e	☑	☐
f. The proposed action may result in increased erosion, whether from physical disturbance or vegetation removal (including from treatment by herbicides).	D2e, D2q	☑	☐
g. The proposed action is, or may be, located within a Coastal Erosion hazard area.	B1i	☑	☐
h. Other impacts: _____		☐	☐

2. Impact on Geological Features

The proposed action may result in the modification or destruction of, or inhibit access to, any unique or unusual land forms on the site (e.g., cliffs, dunes, minerals, fossils, caves). (See Part 1. E.2.g)

☑ NO ☐ YES

If "Yes", answer questions a - c. If "No", move on to Section 3.

	Relevant Part I Question(s)	No, or small impact may occur	Moderate to large impact may occur
a. Identify the specific land form(s) attached: _____	E2g	☐	☐
b. The proposed action may affect or is adjacent to a geological feature listed as a registered National Natural Landmark. Specific feature: _____	E3c	☐	☐
c. Other impacts: _____		☐	☐

3. Impacts on Surface Water

The proposed action may affect one or more wetlands or other surface water bodies (e.g., streams, rivers, ponds or lakes). (See Part 1. D.2, E.2.h)

☑ NO ☐ YES

If "Yes", answer questions a - l. If "No", move on to Section 4.

	Relevant Part I Question(s)	No, or small impact may occur	Moderate to large impact may occur
a. The proposed action may create a new water body.	D2b, D1h	☐	☐
b. The proposed action may result in an increase or decrease of over 10% or more than a 10 acre increase or decrease in the surface area of any body of water.	D2b	☐	☐
c. The proposed action may involve dredging more than 100 cubic yards of material from a wetland or water body.	D2a	☐	☐
d. The proposed action may involve construction within or adjoining a freshwater or tidal wetland, or in the bed or banks of any other water body.	E2h	☐	☐
e. The proposed action may create turbidity in a waterbody, either from upland erosion, runoff or by disturbing bottom sediments.	D2a, D2h	☐	☐
f. The proposed action may include construction of one or more intake(s) for withdrawal of water from surface water.	D2c	☐	☐
g. The proposed action may include construction of one or more outfall(s) for discharge of wastewater to surface water(s).	D2d	☐	☐
h. The proposed action may cause soil erosion, or otherwise create a source of stormwater discharge that may lead to siltation or other degradation of receiving water bodies.	D2e	☐	☐
i. The proposed action may affect the water quality of any water bodies within or downstream of the site of the proposed action.	E2h	☐	☐
j. The proposed action may involve the application of pesticides or herbicides in or around any water body.	D2q, E2h	☐	☐
k. The proposed action may require the construction of new, or expansion of existing, wastewater treatment facilities.	D1a, D2d	☐	☐

l. Other impacts: _____		☐	☐

4. Impact on groundwater

The proposed action may result in new or additional use of ground water, or may have the potential to introduce contaminants to ground water or an aquifer. (See Part 1. D.2.a, D.2.c, D.2.d, D.2.p, D.2.q, D.2.t) ☑ NO ☐ YES

If "Yes", answer questions a - h. If "No", move on to Section 5.

	Relevant Part I Question(s)	No, or small impact may occur	Moderate to large impact may occur
a. The proposed action may require new water supply wells, or create additional demand on supplies from existing water supply wells.	D2c	☐	☐
b. Water supply demand from the proposed action may exceed safe and sustainable withdrawal capacity rate of the local supply or aquifer. Cite Source: _____	D2c	☐	☐
c. The proposed action may allow or result in residential uses in areas without water and sewer services.	D1a, D2c	☐	☐
d. The proposed action may include or require wastewater discharged to groundwater.	D2d, E2l	☐	☐
e. The proposed action may result in the construction of water supply wells in locations where groundwater is, or is suspected to be, contaminated.	D2c, E1f, E1g, E1h	☐	☐
f. The proposed action may require the bulk storage of petroleum or chemical products over ground water or an aquifer.	D2p, E2l	☐	☐
g. The proposed action may involve the commercial application of pesticides within 100 feet of potable drinking water or irrigation sources.	E2h, D2q, E2l, D2c	☐	☐
h. Other impacts: _____		☐	☐

5. Impact on Flooding

The proposed action may result in development on lands subject to flooding. (See Part 1. E.2) ☑ NO ☐ YES

If "Yes", answer questions a - g. If "No", move on to Section 6.

	Relevant Part I Question(s)	No, or small impact may occur	Moderate to large impact may occur
a. The proposed action may result in development in a designated floodway.	E2i	☐	☐
b. The proposed action may result in development within a 100 year floodplain.	E2j	☐	☐
c. The proposed action may result in development within a 500 year floodplain.	E2k	☐	☐
d. The proposed action may result in, or require, modification of existing drainage patterns.	D2b, D2e	☐	☐
e. The proposed action may change flood water flows that contribute to flooding.	D2b, E2i, E2j, E2k	☐	☐
f. If there is a dam located on the site of the proposed action, is the dam in need of repair, or upgrade?	E1e	☐	☐

g. Other impacts: _____		☐	☐

6. Impacts on Air

The proposed action may include a state regulated air emission source. (See Part 1. D.2.f., D,2,h, D.2.g) ☑ NO ☐ YES

If "Yes", answer questions a - f. If "No", move on to Section 7.

	Relevant Part I Question(s)	No, or small impact may occur	Moderate to large impact may occur
a. If the proposed action requires federal or state air emission permits, the action may also emit one or more greenhouse gases at or above the following levels:			
i. More than 1000 tons/year of carbon dioxide (CO_2)	D2g	☐	☐
ii. More than 3.5 tons/year of nitrous oxide (N_2O)	D2g	☐	☐
iii. More than 1000 tons/year of carbon equivalent of perfluorocarbons (PFCs)	D2g	☐	☐
iv. More than .045 tons/year of sulfur hexafluoride (SF_6)	D2g	☐	☐
v. More than 1000 tons/year of carbon dioxide equivalent of hydrochloroflourocarbons (HFCs) emissions	D2g	☐	☐
vi. 43 tons/year or more of methane	D2h	☐	☐
b. The proposed action may generate 10 tons/year or more of any one designated hazardous air pollutant, or 25 tons/year or more of any combination of such hazardous air pollutants.	D2g	☐	☐
c. The proposed action may require a state air registration, or may produce an emissions rate of total contaminants that may exceed 5 lbs. per hour, or may include a heat source capable of producing more than 10 million BTU's per hour.	D2f, D2g	☐	☐
d. The proposed action may reach 50% of any of the thresholds in "a" through "c", above.	D2g	☐	☐
e. The proposed action may result in the combustion or thermal treatment of more than 1 ton of refuse per hour.	D2s	☐	☐
f. Other impacts: _____		☐	☐

7. Impact on Plants and Animals

The proposed action may result in a loss of flora or fauna. (See Part 1. E.2. m.-q.) ☑ NO ☐ YES

If "Yes", answer questions a - j. If "No", move on to Section 8.

	Relevant Part I Question(s)	No, or small impact may occur	Moderate to large impact may occur
a. The proposed action may cause reduction in population or loss of individuals of any threatened or endangered species, as listed by New York State or the Federal government, that use the site, or are found on, over, or near the site.	E2o	☐	☐
b. The proposed action may result in a reduction or degradation of any habitat used by any rare, threatened or endangered species, as listed by New York State or the federal government.	E2o	☐	☐
c. The proposed action may cause reduction in population, or loss of individuals, of any species of special concern or conservation need, as listed by New York State or the Federal government, that use the site, or are found on, over, or near the site.	E2p	☐	☐
d. The proposed action may result in a reduction or degradation of any habitat used by any species of special concern and conservation need, as listed by New York State or the Federal government.	E2p	☐	☐

e. The proposed action may diminish the capacity of a registered National Natural Landmark to support the biological community it was established to protect.	E3c	☐	☐
f. The proposed action may result in the removal of, or ground disturbance in, any portion of a designated significant natural community. Source: _____	E2n	☐	☐
g. The proposed action may substantially interfere with nesting/breeding, foraging, or over-wintering habitat for the predominant species that occupy or use the project site.	E2m	☐	☐
h. The proposed action requires the conversion of more than 10 acres of forest, grassland or any other regionally or locally important habitat. Habitat type & information source: _____	E1b	☐	☐
i. Proposed action (commercial, industrial or recreational projects, only) involves use of herbicides or pesticides.	D2q	☐	☐
j. Other impacts: _____		☐	☐

8. Impact on Agricultural Resources

The proposed action may impact agricultural resources. (See Part 1. E.3.a. and b.) ☑ NO ☐ YES

If "Yes", answer questions a - h. If "No", move on to Section 9.

	Relevant Part I Question(s)	No, or small impact may occur	Moderate to large impact may occur
a. The proposed action may impact soil classified within soil group 1 through 4 of the NYS Land Classification System.	E2c, E3b	☐	☐
b. The proposed action may sever, cross or otherwise limit access to agricultural land (includes cropland, hayfields, pasture, vineyard, orchard, etc).	E1a, Elb	☐	☐
c. The proposed action may result in the excavation or compaction of the soil profile of active agricultural land.	E3b	☐	☐
d. The proposed action may irreversibly convert agricultural land to non-agricultural uses, either more than 2.5 acres if located in an Agricultural District, or more than 10 acres if not within an Agricultural District.	E1b, E3a	☐	☐
e. The proposed action may disrupt or prevent installation of an agricultural land management system.	El a, E1b	☐	☐
f. The proposed action may result, directly or indirectly, in increased development potential or pressure on farmland.	C2c, C3, D2c, D2d	☐	☐
g. The proposed project is not consistent with the adopted municipal Farmland Protection Plan.	C2c	☐	☐
h. Other impacts: _____		☐	☐

9. Impact on Aesthetic Resources

The land use of the proposed action are obviously different from, or are in sharp contrast to, current land use patterns between the proposed project and a scenic or aesthetic resource. (Part 1. E.1.a, E.1.b, E.3.h.)

☐ NO ☑ YES

If "Yes", answer questions a - g. If "No", go to Section 10.

	Relevant Part I Question(s)	No, or small impact may occur	Moderate to large impact may occur
a. Proposed action may be visible from any officially designated federal, state, or local scenic or aesthetic resource.	E3h	☐	☑
b. The proposed action may result in the obstruction, elimination or significant screening of one or more officially designated scenic views.	E3h, C2b	☑	☐
c. The proposed action may be visible from publicly accessible vantage points: i. Seasonally (e.g., screened by summer foliage, but visible during other seasons) ii. Year round	E3h	 ☐ ☐	 ☑ ☑
d. The situation or activity in which viewers are engaged while viewing the proposed action is: i. Routine travel by residents, including travel to and from work ii. Recreational or tourism based activities	E3h E2q, E1c	 ☐ ☐	 ☑ ☑
e. The proposed action may cause a diminishment of the public enjoyment and appreciation of the designated aesthetic resource.	E3h	☑	☐
f. There are similar projects visible within the following distance of the proposed project: 0-1/2 mile ½ -3 mile 3-5 mile 5+ mile	D1a, E1a, D1f, D1g	☑	☐
g. Other impacts: _____		☐	☐

10. Impact on Historic and Archeological Resources

The proposed action may occur in or adjacent to a historic or archaeological resource. (Part 1. E.3.e, f. and g.)

☑ NO ☐ YES

If "Yes", answer questions a - e. If "No", go to Section 11.

	Relevant Part I Question(s)	No, or small impact may occur	Moderate to large impact may occur
a. The proposed action may occur wholly or partially within, or substantially contiguous to, any buildings, archaeological site or district which is listed on or has been nominated by the NYS Board of Historic Preservation for inclusion on the State or National Register of Historic Places.	E3e	☐	☑
b. The proposed action may occur wholly or partially within, or substantially contiguous to, an area designated as sensitive for archaeological sites on the NY State Historic Preservation Office (SHPO) archaeological site inventory.	E3f	☑	☐
c. The proposed action may occur wholly or partially within, or substantially contiguous to, an archaeological site not included on the NY SHPO inventory. Source: _____	E3g	☑	☐

d. Other impacts: _____		☐	☐
e. If any of the above (a-d) are answered "Moderate to large impact may occur", continue with the following questions to help support conclusions in Part 3:			
i. The proposed action may result in the destruction or alteration of all or part of the site or property.	E3e, E3g, E3f	☐	☐
ii. The proposed action may result in the alteration of the property's setting or integrity.	E3e, E3f, E3g, E1a, E1b	☐	☐
iii. The proposed action may result in the introduction of visual elements which are out of character with the site or property, or may alter its setting.	E3e, E3f, E3g, E3h, C2, C3	☐	☐

11. Impact on Open Space and Recreation

The proposed action may result in a loss of recreational opportunities or a reduction of an open space resource as designated in any adopted municipal open space plan.
(See Part 1. C.2.c, E.1.c., E.2.q.)
If "Yes", answer questions a - e. If "No", go to Section 12.

☑ NO ☐ YES

	Relevant Part I Question(s)	No, or small impact may occur	Moderate to large impact may occur
a. The proposed action may result in an impairment of natural functions, or "ecosystem services", provided by an undeveloped area, including but not limited to stormwater storage, nutrient cycling, wildlife habitat.	D2e, E1b E2h, E2m, E2o, E2n, E2p	☐	☐
b. The proposed action may result in the loss of a current or future recreational resource.	C2a, E1c, C2c, E2q	☐	☐
c. The proposed action may eliminate open space or recreational resource in an area with few such resources.	C2a, C2c E1c, E2q	☐	☐
d. The proposed action may result in loss of an area now used informally by the community as an open space resource.	C2c, E1c	☐	☐
e. Other impacts: _____		☐	☐

12. Impact on Critical Environmental Areas

The proposed action may be located within or adjacent to a critical environmental area (CEA). (See Part 1. E.3.d)
If "Yes", answer questions a - c. If "No", go to Section 13.

☑ NO ☐ YES

	Relevant Part I Question(s)	No, or small impact may occur	Moderate to large impact may occur
a. The proposed action may result in a reduction in the quantity of the resource or characteristic which was the basis for designation of the CEA.	E3d	☐	☐
b. The proposed action may result in a reduction in the quality of the resource or characteristic which was the basis for designation of the CEA.	E3d	☐	☐
c. Other impacts: _____		☐	☐

13. Impact on Transportation

The proposed action may result in a change to existing transportation systems. (See Part 1. D.2.j) ☑ NO ☐ YES

If "Yes", answer questions a - f. If "No", go to Section 14.

	Relevant Part I Question(s)	No, or small impact may occur	Moderate to large impact may occur
a. Projected traffic increase may exceed capacity of existing road network.	D2j	☐	☐
b. The proposed action may result in the construction of paved parking area for 500 or more vehicles.	D2j	☐	☐
c. The proposed action will degrade existing transit access.	D2j	☐	☐
d. The proposed action will degrade existing pedestrian or bicycle accommodations.	D2j	☐	☐
e. The proposed action may alter the present pattern of movement of people or goods.	D2j	☐	☐
f. Other impacts: _____		☐	☐

14. Impact on Energy

The proposed action may cause an increase in the use of any form of energy. (See Part 1. D.2.k) ☑ NO ☐ YES

If "Yes", answer questions a - e. If "No", go to Section 15.

	Relevant Part I Question(s)	No, or small impact may occur	Moderate to large impact may occur
a. The proposed action will require a new, or an upgrade to an existing, substation.	D2k	☐	☐
b. The proposed action will require the creation or extension of an energy transmission or supply system to serve more than 50 single or two-family residences or to serve a commercial or industrial use.	D1f, D1q, D2k	☐	☐
c. The proposed action may utilize more than 2,500 MWhrs per year of electricity.	D2k	☐	☐
d. The proposed action may involve heating and/or cooling of more than 100,000 square feet of building area when completed.	D1g	☐	☐
e. Other Impacts: _____			

15. Impact on Noise, Odor, and Light

The proposed action may result in an increase in noise, odors, or outdoor lighting. (See Part 1. D.2.m., n., and o.) ☑ NO ☐ YES

If "Yes", answer questions a - f. If "No", go to Section 16.

	Relevant Part I Question(s)	No, or small impact may occur	Moderate to large impact may occur
a. The proposed action may produce sound above noise levels established by local regulation.	D2m	☐	☐
b. The proposed action may result in blasting within 1,500 feet of any residence, hospital, school, licensed day care center, or nursing home.	D2m, E1d	☐	☐
c. The proposed action may result in routine odors for more than one hour per day.	D2o	☐	☐

d. The proposed action may result in light shining onto adjoining properties.	D2n	☐	☐
e. The proposed action may result in lighting creating sky-glow brighter than existing area conditions.	D2n, E1a	☐	☐
f. Other impacts: _____		☐	☐

16. Impact on Human Health

The proposed action may have an impact on human health from exposure to new or existing sources of contaminants. (See Part 1.D.2.q., E.1. d. f. g. and h.) ☑ NO ☐ YES

If "Yes", answer questions a - m. If "No", go to Section 17.

	Relevant Part I Question(s)	No,or small impact may cccur	Moderate to large impact may occur
a. The proposed action is located within 1500 feet of a school, hospital, licensed day care center, group home, nursing home or retirement community.	E1d	☐	☐
b. The site of the proposed action is currently undergoing remediation.	E1g, E1h	☐	☐
c. There is a completed emergency spill remediation, or a completed environmental site remediation on, or adjacent to, the site of the proposed action.	E1g, E1h	☐	☐
d. The site of the action is subject to an institutional control limiting the use of the property (e.g., easement or deed restriction).	E1g, E1h	☐	☐
e. The proposed action may affect institutional control measures that were put in place to ensure that the site remains protective of the environment and human health.	E1g, E1h	☐	☐
f. The proposed action has adequate control measures in place to ensure that future generation, treatment and/or disposal of hazardous wastes will be protective of the environment and human health.	D2t	☐	☐
g. The proposed action involves construction or modification of a solid waste management facility.	D2q, E1f	☐	☐
h. The proposed action may result in the unearthing of solid or hazardous waste.	D2q, E1f	☐	☐
i. The proposed action may result in an increase in the rate of disposal, or processing, of solid waste.	D2r, D2s	☐	☐
j. The proposed action may result in excavation or other disturbance within 2000 feet of a site used for the disposal of solid or hazardous waste.	E1f, E1g E1h	☐	☐
k. The proposed action may result in the migration of explosive gases from a landfill site to adjacent off site structures.	E1f, E1g	☐	☐
l. The proposed action may result in the release of contaminated leachate from the project site.	D2s, E1f, D2r	☐	☐
m. Other impacts: _____			

17. Consistency with Community Plans

The proposed action is not consistent with adopted land use plans. ☑ NO ☐ YES
(See Part 1. C.1, C.2. and C.3.)
If "Yes", answer questions a - h. If "No", go to Section 18.

	Relevant Part I Question(s)	No, or small impact may occur	Moderate to large impact may occur
a. The proposed action's land use components may be different from, or in sharp contrast to, current surrounding land use pattern(s).	C2, C3, D1a E1a, E1b	☑	☐
b. The proposed action will cause the permanent population of the city, town or village in which the project is located to grow by more than 5%.	C2	☑	☐
c. The proposed action is inconsistent with local land use plans or zoning regulations.	C2, C2, C3	☐	☑
d. The proposed action is inconsistent with any County plans, or other regional land use plans.	C2, C2	☑	☐
e. The proposed action may cause a change in the density of development that is not supported by existing infrastructure or is distant from existing infrastructure.	C3, D1c, D1d, D1f, D1d, Elb	☑	☐
f. The proposed action is located in an area characterized by low density development that will require new or expanded public infrastructure.	C4, D2c, D2d D2j	☑	☐
g. The proposed action may induce secondary development impacts (e.g., residential or commercial development not included in the proposed action)	C2a	☑	☐
h. Other: _____		☐	☐

18. Consistency with Community Character

The proposed project is inconsistent with the existing community character. ☑ NO ☐ YES
(See Part 1. C.2, C.3, D.2, E.3)
If "Yes", answer questions a - g. If "No", proceed to Part 3.

	Relevant Part I Question(s)	No, or small impact may occur	Moderate to large impact may occur
a. The proposed action may replace or eliminate existing facilities, structures, or areas of historic importance to the community.	E3e, E3f, E3g	☐	☐
b. The proposed action may create a demand for additional community services (e.g. schools, police and fire)	C4	☐	☐
c. The proposed action may displace affordable or low-income housing in an area where there is a shortage of such housing.	C2, C3, D1f D1g, E1a	☐	☐
d. The proposed action may interfere with the use or enjoyment of officially recognized or designated public resources.	C2, E3	☐	☐
e. The proposed action is inconsistent with the predominant architectural scale and character.	C2, C3	☐	☐
f. Proposed action is inconsistent with the character of the existing natural landscape.	C2, C3 E1a, E1b E2g, E2h	☐	☐
g. Other impacts: _____		☐	☐

PRINT FULL FORM

Agency Use Only [IfApplicable]

Project : EHPD Communications Upgrades

Date : 10/07/18

Full Environmental Assessment Form
Part 3 - Evaluation of the Magnitude and Importance of Project Impacts
and
Determination of Significance

Part 3 provides the reasons in support of the determination of significance. The lead agency must complete Part 3 for every question in Part 2 where the impact has been identified as potentially moderate to large or where there is a need to explain why a particular element of the proposed action will not, or may, result in a significant adverse environmental impact.

Based on the analysis in Part 3, the lead agency must decide whether to require an environmental impact statement to further assess the proposed action or whether available information is sufficient for the lead agency to conclude that the proposed action will not have a significant adverse environmental impact. By completing the certification on the next page, the lead agency can complete its determination of significance.

Reasons Supporting This Determination:

To complete this section:

- Identify the impact based on the Part 2 responses and describe its magnitude. Magnitude considers factors such as severity, size or extent of an impact.
- Assess the importance of the impact. Importance relates to the geographic scope, duration, probability of the impact occurring, number of people affected by the impact and any additional environmental consequences if the impact were to occur.
- The assessment should take into consideration any design element or project changes.
- Repeat this process for each Part 2 question where the impact has been identified as potentially moderate to large or where there is a need to explain why a particular element of the proposed action will not, or may, result in a significant adverse environmental impact.
- Provide the reason(s) why the impact may, or will not, result in a significant adverse environmental impact
- For Conditional Negative Declarations identify the specific condition(s) imposed that will modify the proposed action so that no significant adverse environmental impacts will result.
- Attach additional sheets, as needed.

See attached

Determination of Significance - Type 1 and Unlisted Actions

SEQR Status: ☐ Type 1 ☑ Unlisted

Identify portions of EAF completed for this Project: ☑ Part 1 ☑ Part 2 ☑ Part 3

Upon review of the information recorded on this EAF, as noted, plus this additional support information

and considering both the magnitude and importance of each identified potential impact, it is the conclusion of the East Hampton Town Board as lead agency that:

☑ A. This project will result in no significant adverse impacts on the environment, and, therefore, an environmental impact statement need not be prepared. Accordingly, this negative declaration is issued.

☐ B. Although this project could have a significant adverse impact on the environment, that impact will be avoided or substantially mitigated because of the following conditions which will be required by the lead agency:

There will, therefore, be no significant adverse impacts from the project as conditioned, and, therefore, this conditioned negative declaration is issued. A conditioned negative declaration may be used only for UNLISTED actions (see 6 NYCRR 617.d).

☐ C. This Project may result in one or more significant adverse impacts on the environment, and an environmental impact statement must be prepared to further assess the impact(s) and possible mitigation and to explore alternatives to avoid or reduce those impacts. Accordingly, this positive declaration is issued.

Name of Action: East Hampton Police Department Communications Upgrades

Name of Lead Agency: East Hampton Town Board

Name of Responsible Officer in Lead Agency: Peter Van Scoyoc

Title of Responsible Officer: East Hampton Town Supervisor

Signature of Responsible Officer in Lead Agency: Date:

Signature of Preparer (if different from Responsible Officer) Eric Schantz Digitally signed by Eric Schantz DN: cn=Eric Schantz, o, ou, email=eschantz@ehamptonny.gov, c=US Date: 2018.10.08 12:01:48 -04'00' Date: 10/08/18

For Further Information:

Contact Person: Eric Schantz

Address: 300 Pantigo Place, Suite 105

Telephone Number: (631) 324-2178

E-mail: eschantz@ehamptonny.gov

For Type 1 Actions and Conditioned Negative Declarations, a copy of this Notice is sent to:

Chief Executive Officer of the political subdivision in which the action will be principally located (e.g., Town / City / Village of)
Other involved agencies (if any)
Applicant (if any)
Environmental Notice Bulletin: http://www.dec.ny.gov/enb/enb.html

PRINT FULL FORM

The Town of East Hampton needs to upgrade its emergency communications equipment in order to insure public safety and the efficacy of emergency services responses. It has been determined by the communications professionals at the East Hampton Town Police Department that the most desirable option is to make the below listed additions to the Town's communication infrastructure:

East Hampton Police Department Emergency Services Communications Upgrade Projects:

1. 365 Montauk Highway, Montauk: a new 300' tall lattice tower with associated emergency services communications equipment and equipment shelter.

2. 439 Main Street, Amagansett: No structural changes. Replacement of existing antennas on existing towers and existing equipment shelters.

3. 159 Pantigo Road, East Hampton: No structural changes. Replacement of existing antennas on existing towers and existing equipment shelters.

4. 411 Wainscott Northwest Road, Wainscott: No structural changes. Replacement of existing antennas on existing towers and existing equipment shelters.

5. 131 Wainscott Northwest Road/45 Industrial Road, Wainscott: Replacement of existing 54.25' monopole with an 85' monopole and associated emergency services communications equipment.

6. 41 Melchionna Rd, Montauk: Potential future 88' tower and associated equipment, equipment shelter(s), accessory structures, access improvements, etc.

7. 507 Middle Line Highway, Sag Harbor: A new 12' x 24' building, new 70kw generator, new 1000gallon propane tank, remove 25kw generator, remove two 100 gallon propane tanks, antennas on existing tower.

8. 103 Flaggy Hole Road, Springs: Potential future 150' tower and associated equipment, equipment shelter(s), accessory structures, access improvements, etc.

Most notable of these changes is the construction of a 300' tower at the existing cell tower site adjacent to the Montauk Recycling Center. Additionally, the tower at the East Hampton Police Department Headquarters on Industrial Road in Wainscott would be removed (55' in height) and replaced with an 85' tall monopole. The remainder of the upgrades are essentially swap-outs of existing equipment with little visual impact.

The East Hampton Police Department, Planning Department and other Town officials discussed other options in order to provide a direct link between the Montauk site and Town Hall, which is necessary to provide reliable emergency services communications. A new 300' tall tower at Town Hall as opposed to at the Montauk site was considered. However, this was deemed less appropriate as this facility is much more visible to the public. It also would present problems due to its location within the approach/departure path of the East Hampton Airport and upon inquiries with the Federal Aviation Administration the East Hampton Police Department found this to be a problematic alternative to the communications issue.

A significant practical problem which necessitates such a tall tower is the topography between Town Hall and Montauk, particularly the hills to the immediate west of Devon. This prevents the Town from utilizing the existing 150' tall towers (or replacing them with towers of the same height) at Town Hall and Montauk and requires one or the other to be basically doubled in height. It was also considered whether or not an intermediate site should be added. Such a site would either have to be in the hills west of Devon, which are almost exclusively residential and most likely more impactful visually than a taller tower at the Montauk site, or as was considered, installed on the MacKay Radio Tower (300' tall) in Napeague. However, the Napeague site is owned by New York State and is structurally unstable. Both facts have resulted in it being nearly impossible to add any equipment to the structure.

It is obvious that the addition of a 300' tall tower at the Montauk site will have a significant visual impact. This tower would be one of the tallest in the Town of East Hampton and would be visible from most of Montauk and to the west from Napeague. However, this is also the case for the existing towers at this site. The addition of a new tower over twice the height of the tallest existing tower will make the facility more prominent but the site is an existing tower site and is already quite visible from many directions.

The communications upgrades included in this project are of immediate need for emergency services capabilities. As such, there is a significant public benefit which cannot be understated. The East Hampton Town Board concedes that although most of the individual aspects of these upgrades are minor in visual impact, the increase in ~30' of height at the East Hampton Police Department Headquarters site in Wainscott and the increase from 150' to 300' at the site adjacent to the Montauk Landfill will substantially increase the visual impacts of the Town's emergency services infrastructure. However, the Montauk site is deemed to be the most appropriate for the needed taller tower and the increase in height in Wainscott should not present a significant change to the existing conditions. For these reasons, the East Hampton Town Board hereby makes a negative declaration pursuant to the New York State Environmental Quality Review Act (SEQRA) and Chapter 128 of the Town Code.

Length (ft)	53'-3"	35'-3"							
Number Of Sides	18								
Thickness (in)	7/16"	3/8"							
Lap Splice (ft)			4' - 6"						
Top Diameter (in)	30.2"	22"							
Bottom Diameter (in)	45.69"	32.26"							
Taper (in/ft)	0.291								
Grade	A572-65								
Weight (lbs)	11326	4260							
Overall Steel Height (ft)	84								

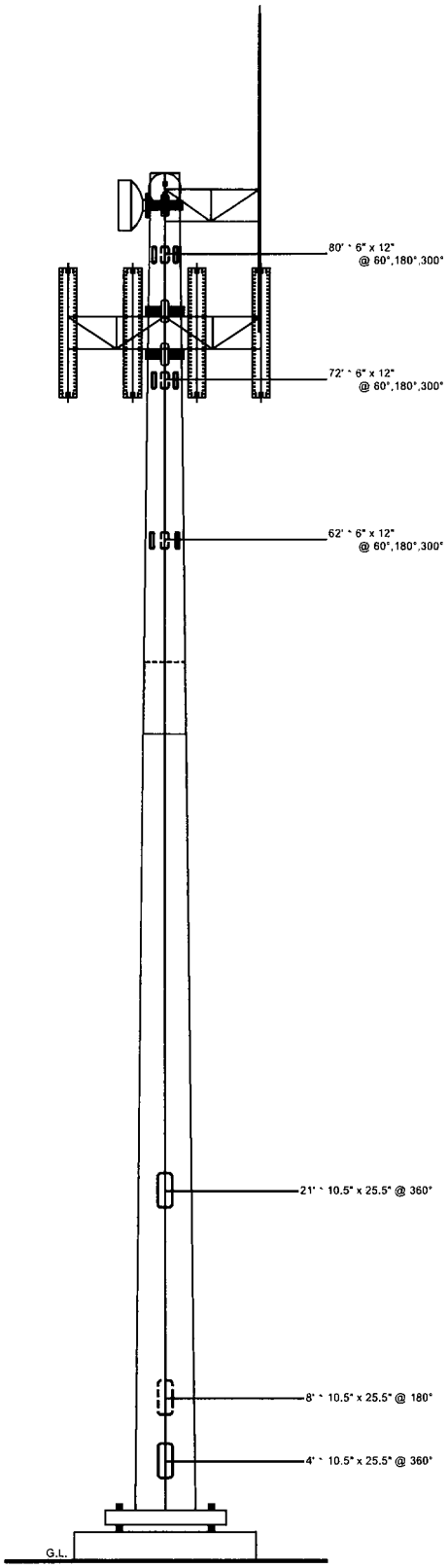

Designed Appurtenance Loading

Elev	Description	Tx-Line
85	(1) 20' x 3in Omni	(1) 1 5/8"
85	(1) 4' lightning rod	
85	(1) Dual Lights	(1) 1 5/8"
84	(1) 2' H.P. Dish	(1) EW90
83	6ft Sidearm	
83	(1) Dish Mount (Monopole Only) - Pipe Mount (up to 6' Dish)	
83	(1) Dish Mount (Monopole Only) - Pipe Mount (up to 6' Dish)	
83	(1) 3' H.P. Dish	(1) EW63
75	3V-Boom - 12ft Face - 3ft Standoff	
75	(12) 8' X 1' X 6IN	(12) 1 5/8"
75	(12) RRH	
75	(12) TMA	

Load Case Reactions

Description	Axial (kips)	Shear (kips)	Moment (ft-k)	Deflection (ft)	Sway (deg)
3s Gusted Wind	22.93	19.73	1185.26	1.22	1.39
3s Gusted Wind 0.9 Dead	17.2	19.74	1182.5	1.22	1.38
3s Gusted Wind&Ice	35.47	4.35	257.85	0.26	0.3
Service Loads	19.11	18.49	1107.38	1.14	1.29

Base Plate Dimensions

Shape	Diameter	Thickness	Bolt Circle	Bolt Qty	Bolt Diameter
Round	58"	2"	52.25"	6	2.25"

Anchor Bolt Dimensions

Length	Diameter	Hole Diameter	Weight	Type	Finish
84"	2.25"	2.625"	726.6	A615-75	Galv

Notes

1) Antenna Feed Lines Run Inside Pole
2) All dimensions are above ground level, unless otherwise specified.
3) Weights shown are estimates. Final weights may vary.
4) Tower Rating: 73.8%
5) The Monopole was designed for a basic wind speed of 108 mph with 0" of radial ice, and 50 mph with 3/4" of radial ice, in accordance with ANSI/TIA-222-G, Structure Class III, Exposure Category C, Topographic Category 1.
6) The tower design meets the requirements for an Ultimate Wind Speed of 149 mph (Risk Category III), in accordance with the 2015 International Building Code.

Sabre Industries
Towers and Poles

Sabre Communications Corporation
7101 Southbridge Drive
P.O. Box 658
Sioux City, IA 51102-0658
Phone: (712) 258-6580
Fax: (712) 279-0814

Information contained herein is the sole property of Sabre Communications Corporation, constitutes a trade secret as defined by Iowa Code Ch. 550 and shall not be reproduced, copied or used in whole or part for any purpose whatsoever without the prior written consent of Sabre Communications Corporation.

Job:	408573
Customer:	EAST HAMPTON TOWN POLICE
Site Name:	Suffolk, NY
Description:	85' Monopole
Date:	8/15/2018 By: JLG

Sabre Industries™
Towers and Poles

No.: 408573

Date: 08/15/18
By: JLG

Customer: EAST HAMPTON TOWN POLICE
Site: Suffolk, NY
85' Monopole at
108 mph wind and 50 mph wind with 0.75" ice per ANSI/TIA-222-G.

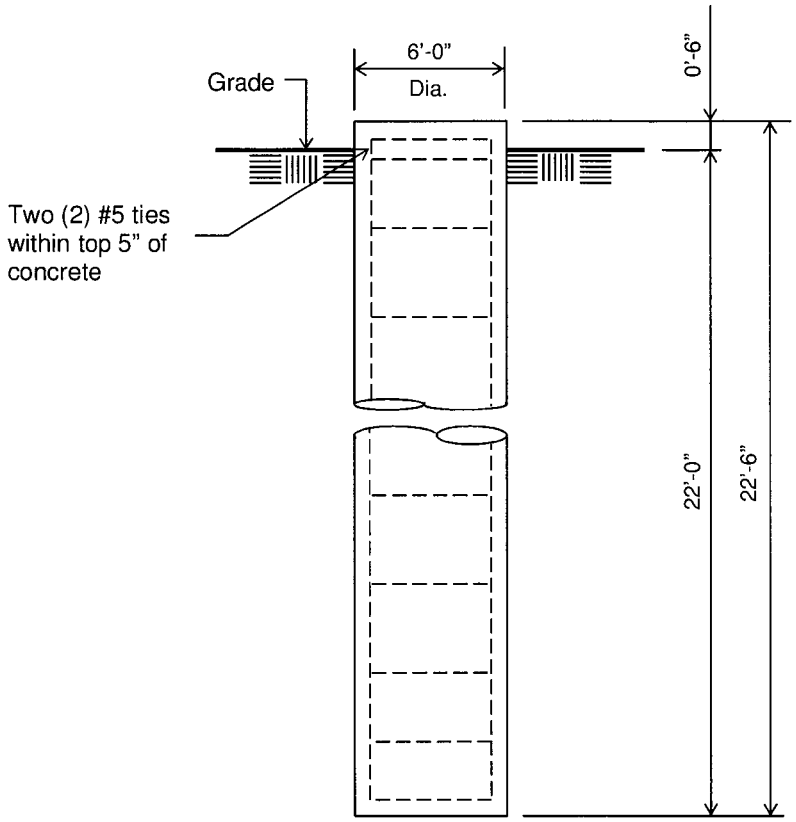

ELEVATION VIEW
(23.56 Cu. Yds.)
(1 REQUIRED; NOT TO SCALE)

Notes:

1) Concrete shall have a minimum 28-day compressive strength of 4,500 psi, in accordance with ACI 318-11.

2) Rebar to conform to ASTM specification A615 Grade 60.

3) All rebar to have a minimum of 3" concrete cover.

4) All exposed concrete corners to be chamfered 3/4".

5) The foundation design is based on the geotechnical boring by Long Island Materials Testing Laboratories, Inc., Drawing # 18870, Dated 7/24/2018.

6) See the geotechnical report for drilled pier installation requirements, if specified.

7) The foundation is based on the following factored loads:
   Moment = 1,185.26 k-ft
   Axial = 22.93 k
   Shear = 19.73 k

Rebar Schedule for Pier	
Pier	(26) #8 vertical rebar w/ #5 ties, two within top 5" of pier, then 12" C/C

Information contained herein is the sole property of Sabre Towers & Poles, constitutes a trade secret as defined by Iowa Code Ch. 550 and shall not be reproduced, copied or used in whole or part for any purpose whatsoever without the prior written consent of Sabre Towers & Poles.

7101 Southbridge Drive - P.O. Box 658 - Sioux City, IA 51102-0658 - Phone 712.258.6690 - Fax 712.279.0814

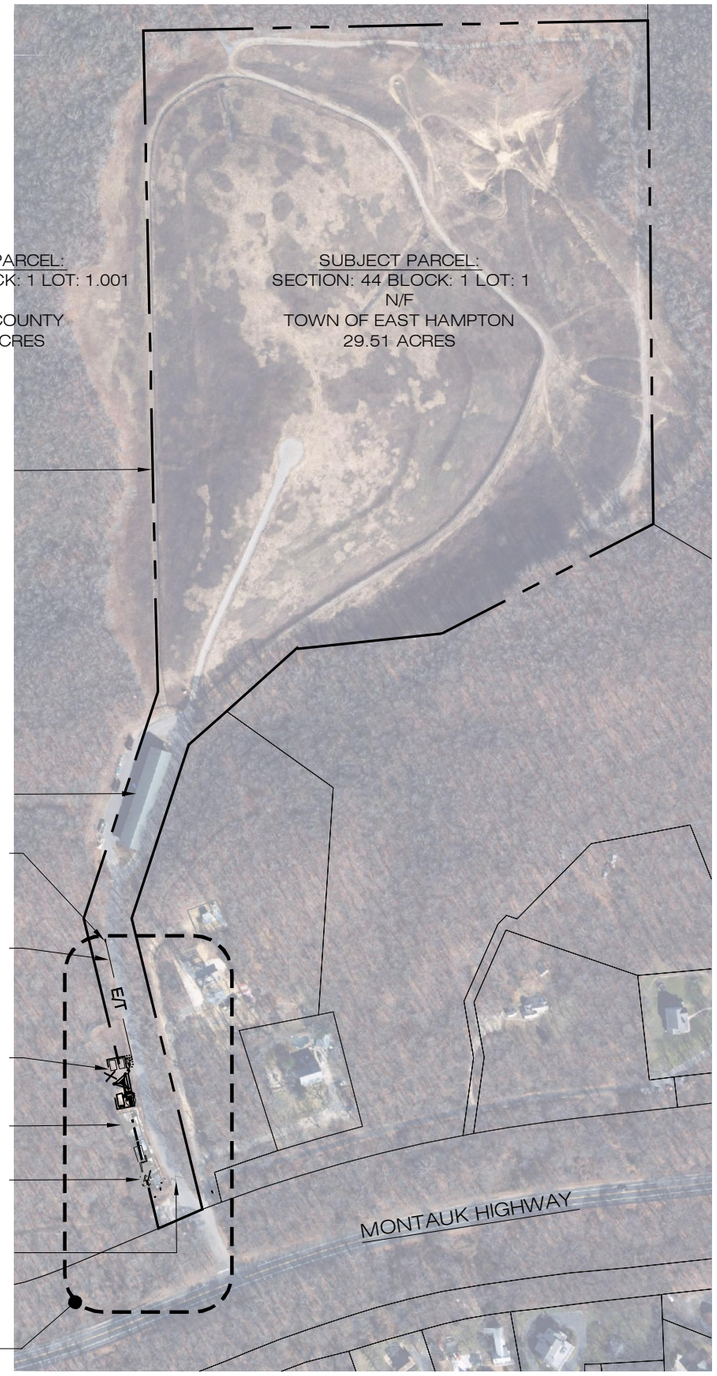

1 CP-1 SITE PLAN

SCALE : 1" = 300'-0"

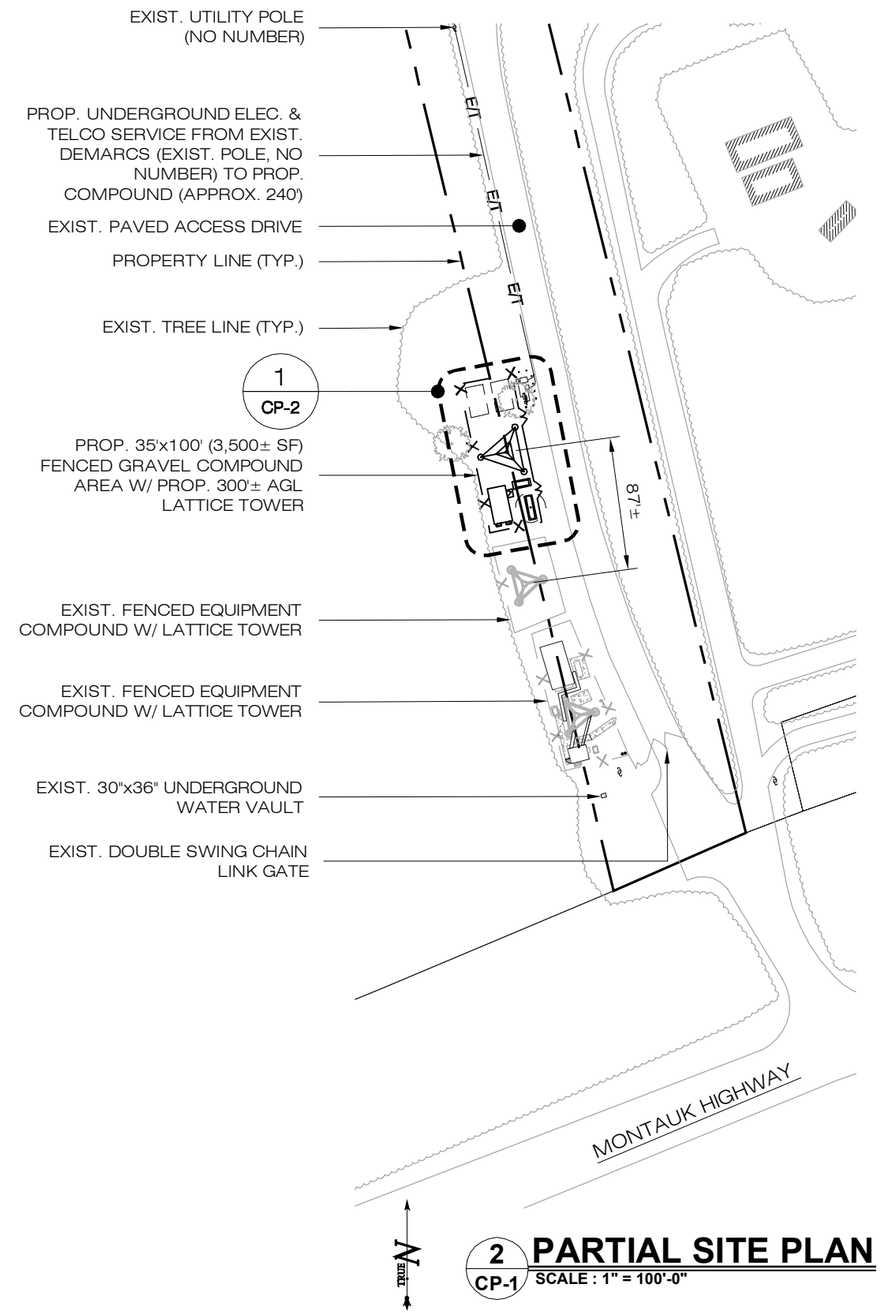

2 CP-1 PARTIAL SITE PLAN

SCALE : 1" = 100'-0"

REVISIONS:
-REV0: 09/25/18: FOR REVIEW: RCB
-REV1: 10/05/18: CLIENT REVS: RCB
-REV2:
-REV3:
-REV4:

APT ENGINEERING
3 SADDLEBROOK DRIVE
KILLINGWORTH, CT 06419
WWW.ALLPOINTSTECH.COM
PHONE: (860)-663-1697
FAX: (860)-663-0935

SHEET NUMBER: CP-1

"MONTAUK HIGHWAY"
365 MONTAUK HIGHWAY
MONTAUK, NY 11954

APT FILING NUMBER: NY523110

DATE OF DV: 09/12/18 | DRAWN BY: CSH
DATE: 09/25/18 | CHECKED BY: RCB

EAST HAMPTON
POLICE DEPARTMENT
131 WAINSCOTT NORTHWEST ROAD
WAINSCOTT, NY 11975

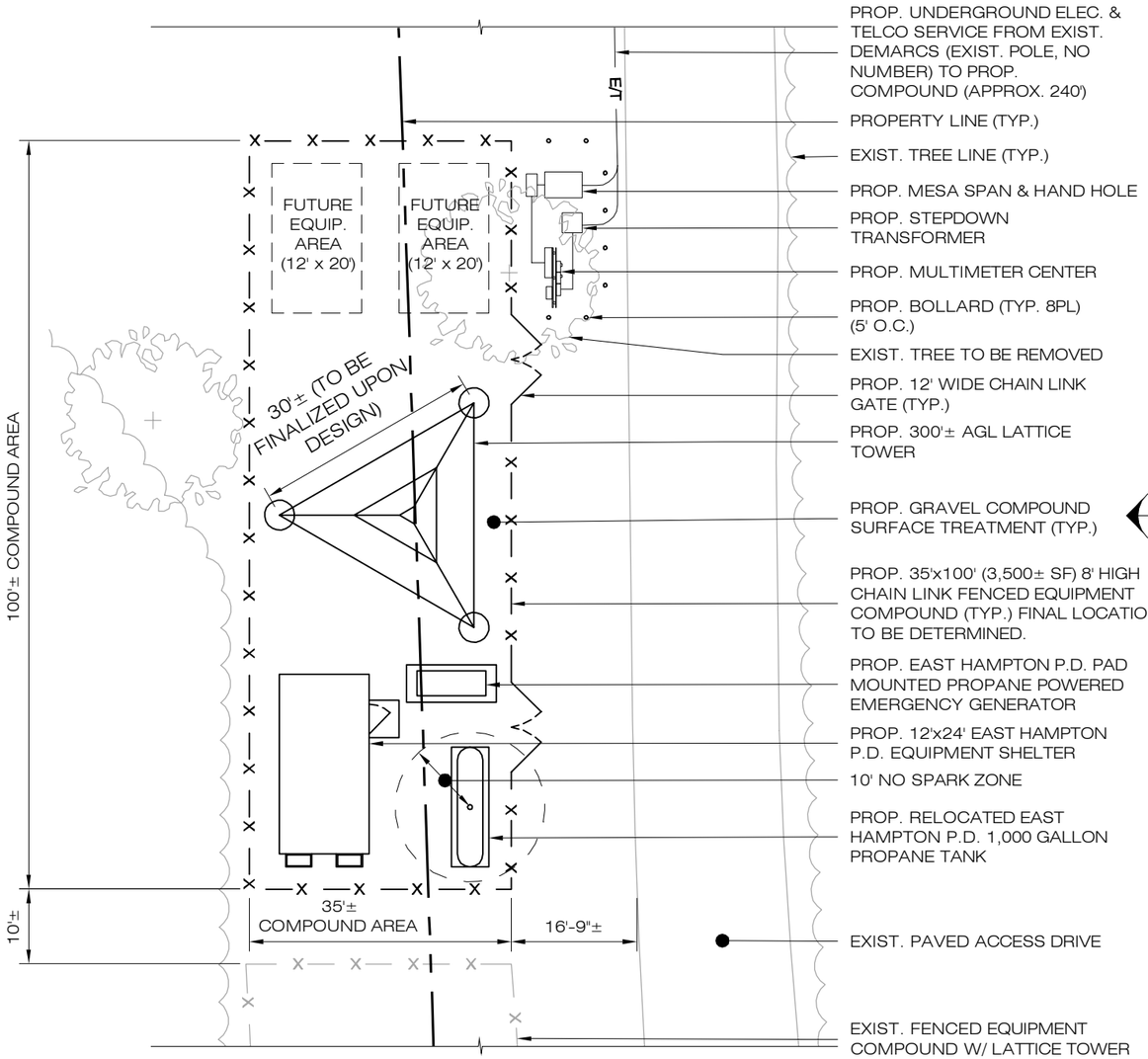

1 COMPOUND PLAN
CP-2 SCALE : 1" = 20'-0"

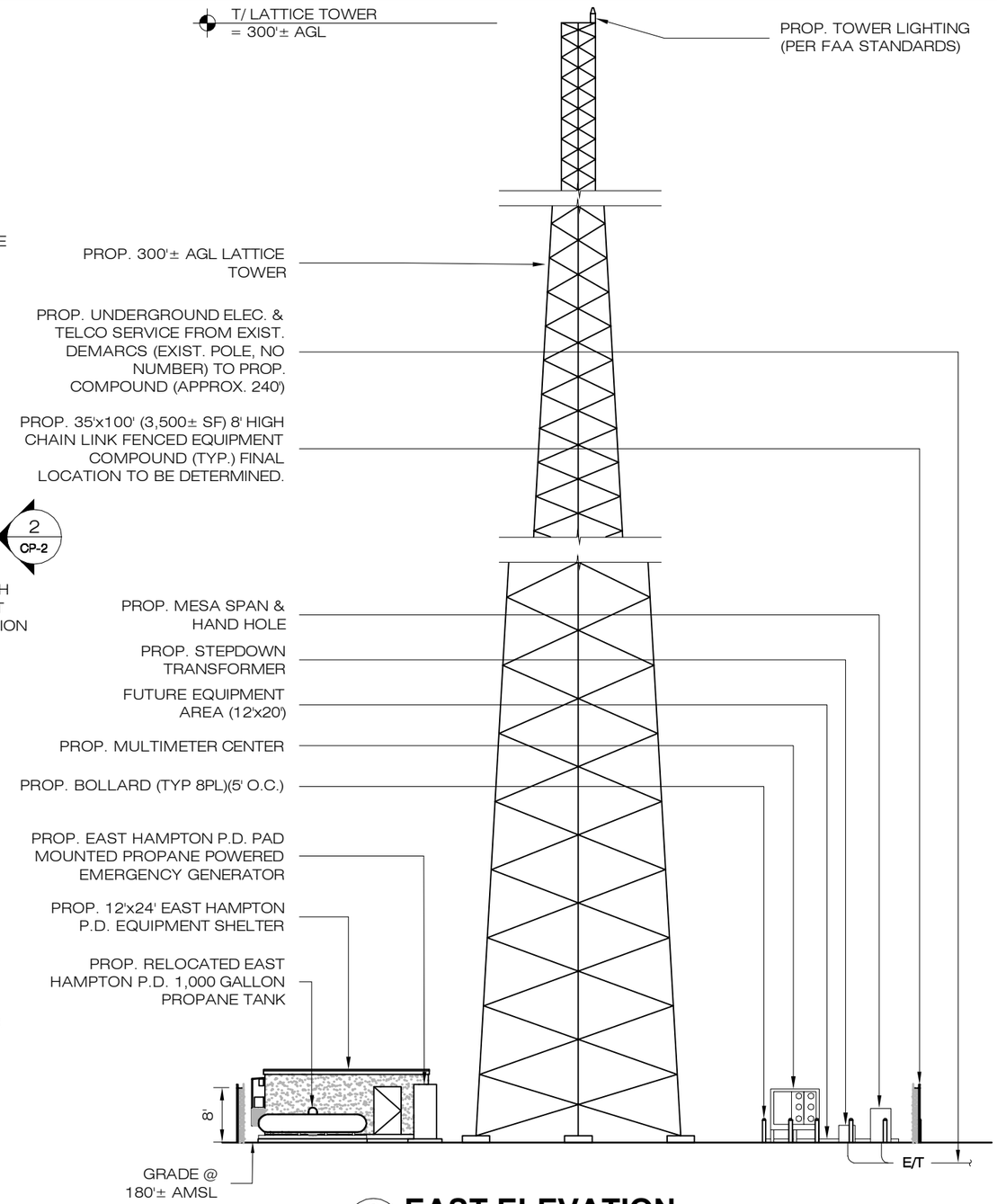

2 EAST ELEVATION
CP-2 SCALE : 1" = 20'-0"

REVISIONS:
-REV0: 09/25/18: FOR REVIEW: RCB
-REV1: 10/05/18: CLIENT REVS: RCB
-REV2:
-REV3:
-REV4:

APT ENGINEERING
3 SADDLEBROOK DRIVE
KILLINGWORTH, CT 06419
WWW.ALLPOINTSTECH.COM
PHONE: (860)-663-1697
FAX: (860)-663-0935

SHEET NUMBER: CP-2

"MONTAUK HIGHWAY"
365 MONTAUK HIGHWAY
MONTAUK, NY 11954

APT FILING NUMBER: NY523110

DATE OF DV: 09/12/18 | DRAWN BY: CSH
DATE: 09/25/18 | CHECKED BY: RCB

EAST HAMPTON POLICE DEPARTMENT
131 WAINSCOTT NORTHWEST ROAD
WAINSCOTT, NY 11975