Fire Island Inlet to Montauk Point
Downtown Montauk
Overview

Fire Island Inlet to Montauk Point
Reformulation Study

BUILDING STRONG®

Overview

- Background & Relationship to FIMP
- Prior Presentations for DT Montauk
  - Fall 2013 Plans & Town Resolution
  - Spring 2014 Plan (updated strategy & plan)
- Stabilization Project Recommendations
  - Stabilization Plan overview / refinements
  - O&M & local sponsor requirements
- Plan Details
- Path Forward, Next Steps

US Army Corps
of Engineers
New York District

Fire Island Inlet to Montauk Point, New York Reformulation Study

NYS Department of Environmental Conservation

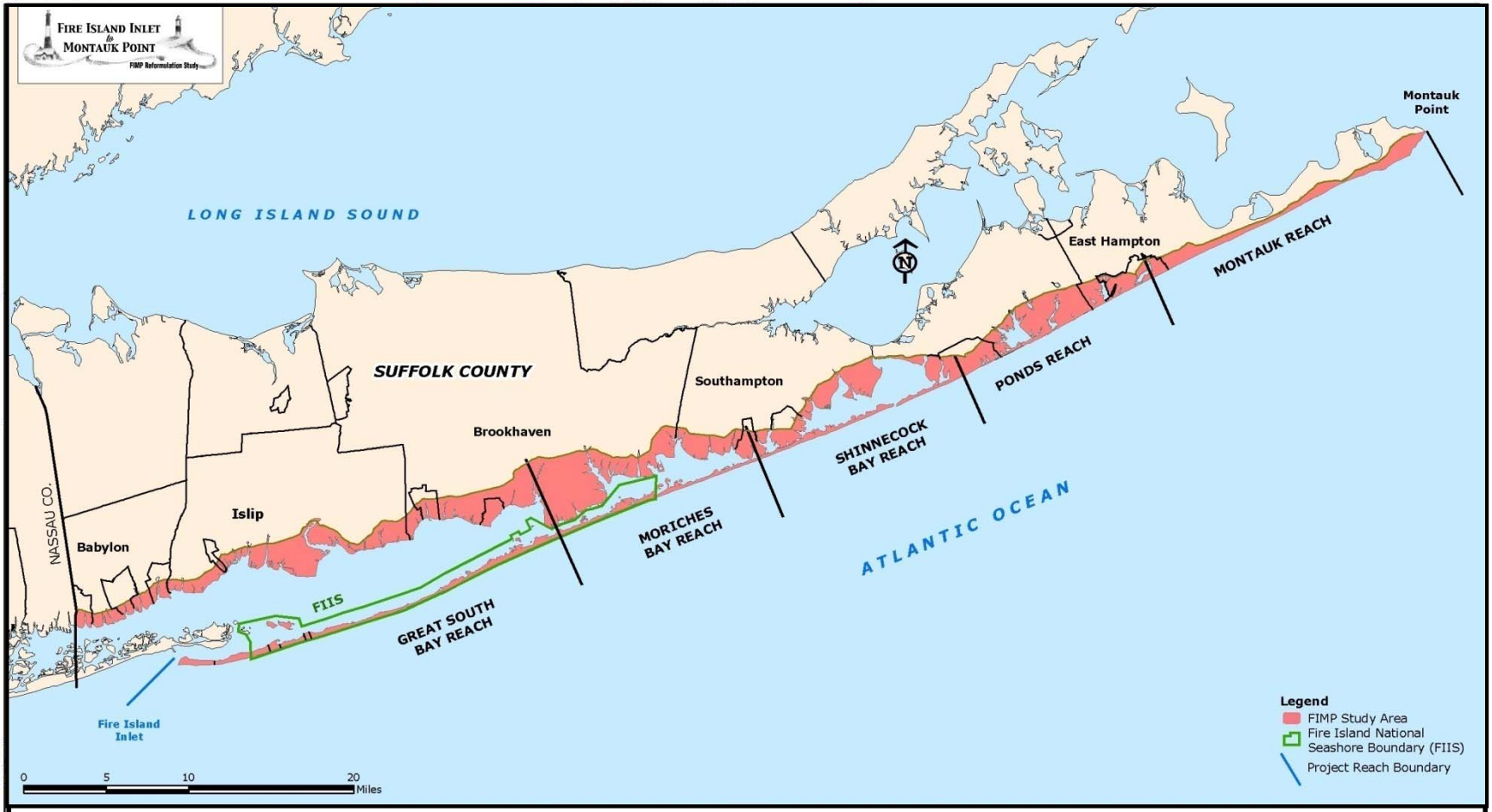

Study Purpose: The Fire Island Inlet to Montauk Point Reformulation (FIMP) Reformulation Study is being undertaken to identify a long-term solution to reduce the risk of coastal storm damages in the study area in a manner which considers the risks to human life and property, while maintaining, enhancing, and restoring ecosystem integrity and coastal biodiversity.

Tentative Federally Supported Plan (Pre-Sandy)

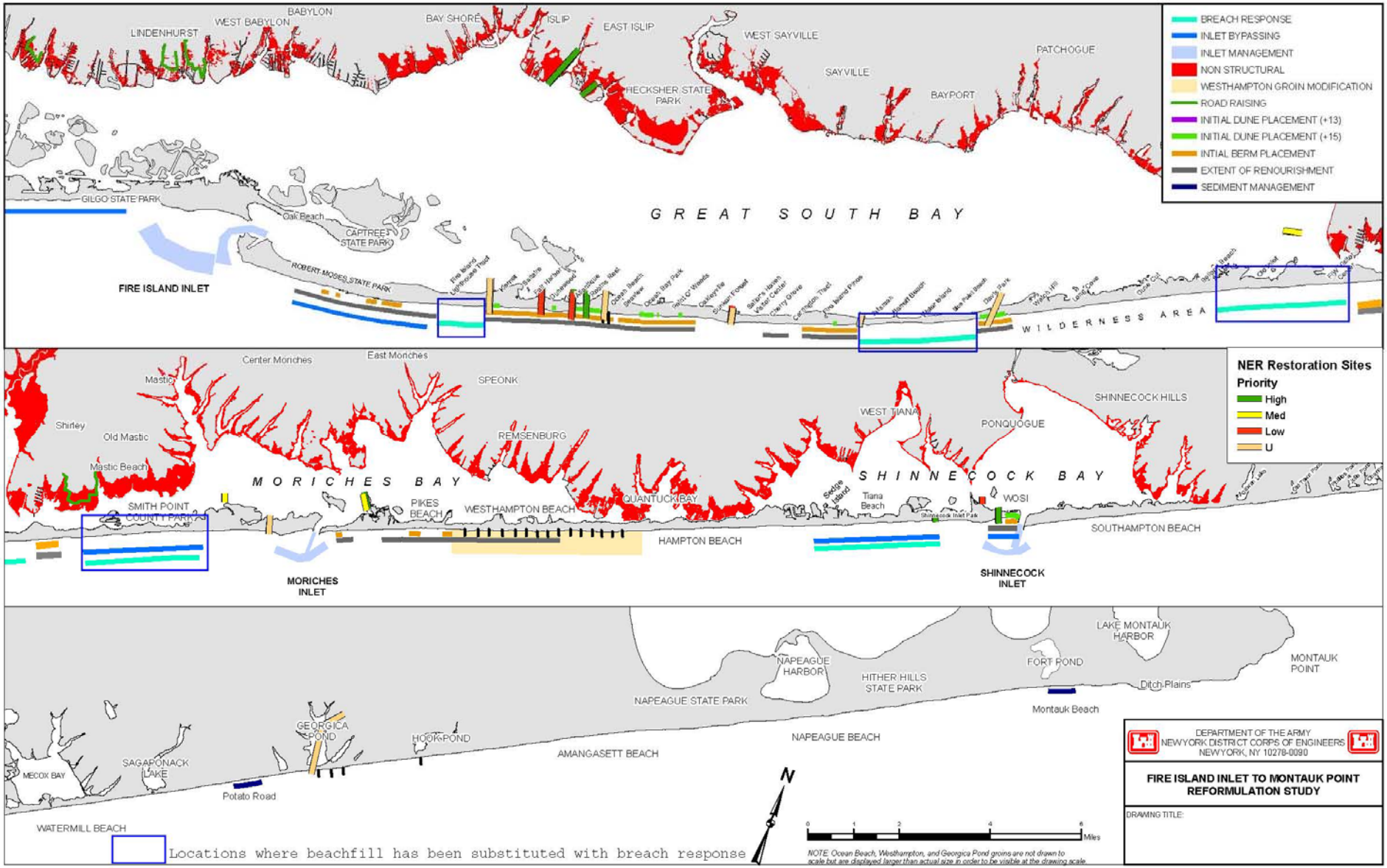

Post-Sandy TFSP Adjustments

Plan Adjustments Due to Sandy:

- Revised Beachfill Alignment & Extent on Fire Island
- Reconsideration of Barrier Island Breach Response
- Reconsideration of Downtown Montauk
- Update of Restoration / Nature Based Features
- Updating Quantities, Costs, Benefits of Plan

Sandy Legislation (P.L. 113-2)

- Sandy Supplemental provides for a cost-sharing Formula at 100% Federal cost for initial construction
- Funds remain available until expended

Path Forward:

- Local Sponsor Agreement on Plan (received 6/14/2013)
- Update Tentative Federal Selected Plan
- Reaffirm Plan Support (NYS, DOI, USACE)
- <u>Stabilization Spin-off Efforts</u>
- Draft Reformulation Report & EIS

Fall 2013

USACE Presentation of Preliminary Alternatives

East Hampton Town Resolution, 10/17/2013

Identified three preferred options:

- Sand-only Option
- Rock and Sand Option
- Geotextile Tube Technology

Spring 2014

Stabilization Refinement

Initial concept as presented in Fall:

- Stabilization would fast-track implementation of FIMP
- Implement long-term recommendations in advance of overall
- Rely on Project Costs & Economics over 50 years

Based upon Washington-level consultation

(USACE and Federal Partners)

- Stabilization as separate, standalone effort
  - Separate Costs, Economics, and Purpose, 1-time Action
- Reformulation as a separate follow-up effort
  - Long-term recommendations

Identifying A Stabilization Alternative

Stabilization as a Separate, Standalone Effort

- Separate Costs, Economics, and Purpose, 1-time Action

Considered:

- Geotextile reinforced dune options
- Smaller scale project
- Project could be implemented by trucking
- Compatible with potential long-term recommendations
- Consistent with Town's Additional requested option

Stabilization Alternative

- Geotextile Reinforced Dune (+13.5 ft) & Berm
- Developed as a Stabilization Alternative
  - ►One-Time Action, can be implemented quickly
  - ►Volume of Fill that does not require dredge
- Provides Lower level of risk reduction
- Designed to bridge the gap until Reformulation Implemented

Geotextile Reinforced Dune & Berm

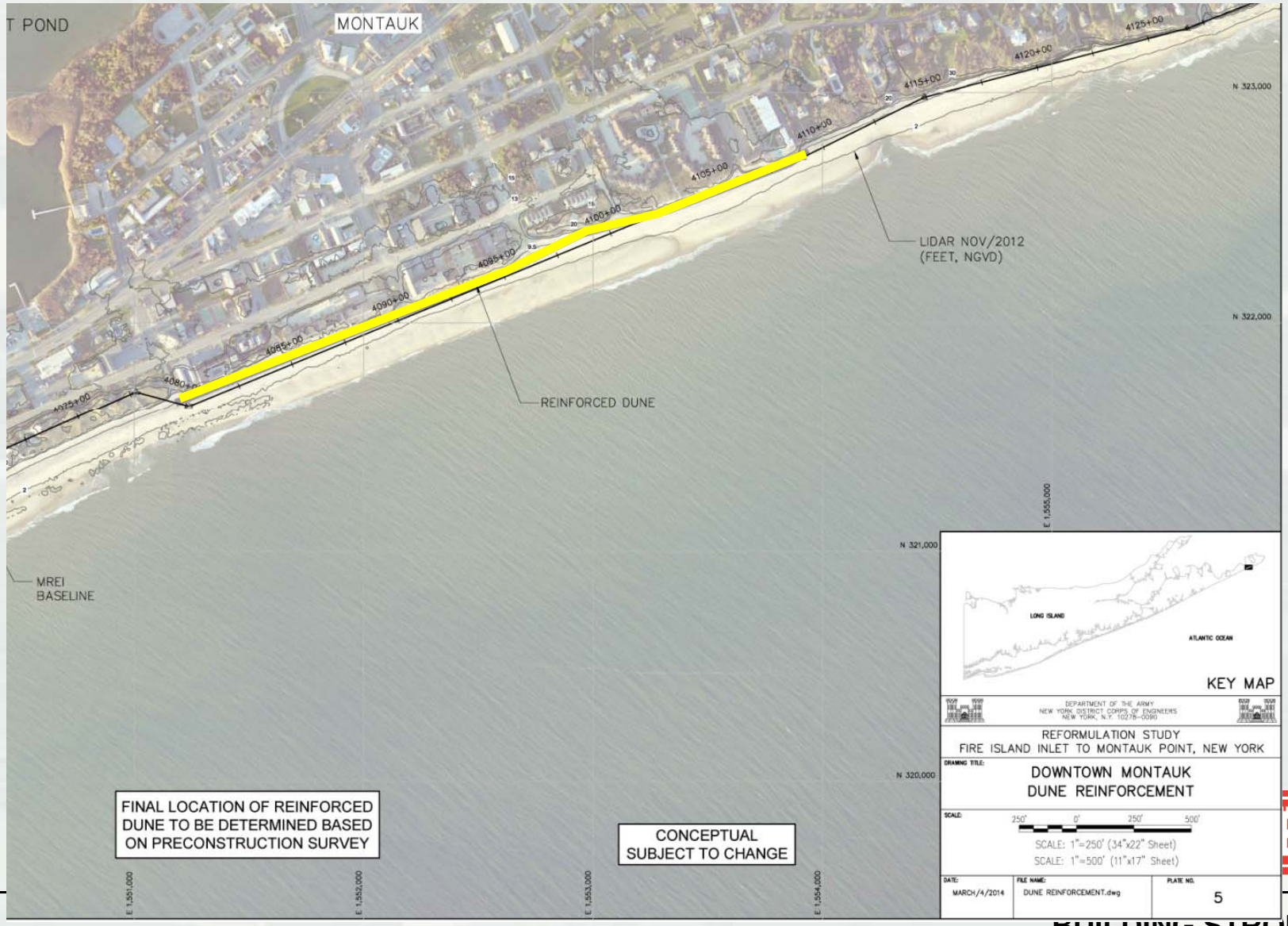

BUILDING STRONG®

Reinforced Dune & Berm Section

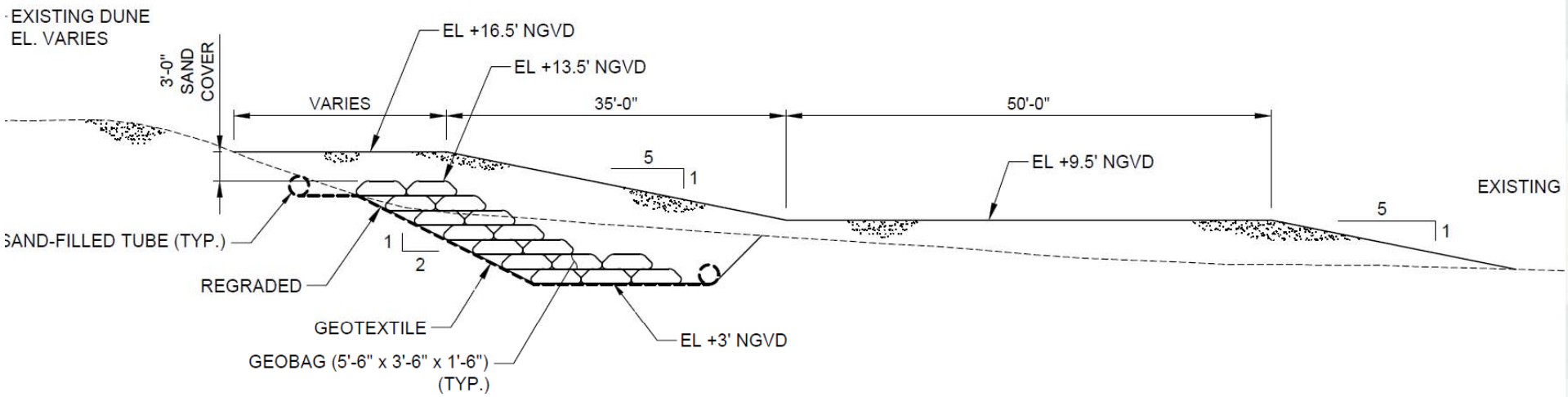

Installation

Figure 6: Mechanical Fill/Placement of Geobags

Hydraulic Fill/Placement of Geobags

Installation Examples

BUILDING STRONG®

Expected Performance

Performance of Structure depends on beach condition

- Seasonal Variability & Long-Term trends
- First 5 years – approximately 25 yr design
- Year 6 – 15, reduces to 15 yr design

What does this mean?

- Not one typical storm – surge, waves, longevity

  Recent nor'easters 2012 – 2014, 4-7 yr events (surge)

  Irene ~6 year event, Sandy ~25 yr event (surge)

Plan Refinements

(Plan changes accounted for in Draft Report)

- Updated Economics – accounting for Town Input
- Refined Design & Quantities – beach width and slope
- Updated Layout – accounting for RE needs
- Updated Construction Method – sand cap
- Updated O&M estimates, based upon Town request
- Defined Public Access
- Updated Costs

East Hampton / Montauk Benefit Analysis

- Benefits Included
  - ▶ Reduced Damages to Buildings and Contents *
  - ▶ Costs Avoided (local efforts / emergency costs)

Period of Analysis - 15 years

	Stabilization Plan
Without Project Damages	$1,378,000
With Project Damages	$326,000
Damages Reduced	$1,052,000
Costs Avoided	$185,000
Total Benefits	$1,237,000
Total Annual Costs	$918,000
BCR	1.4

Reinforced Dune & Berm Section

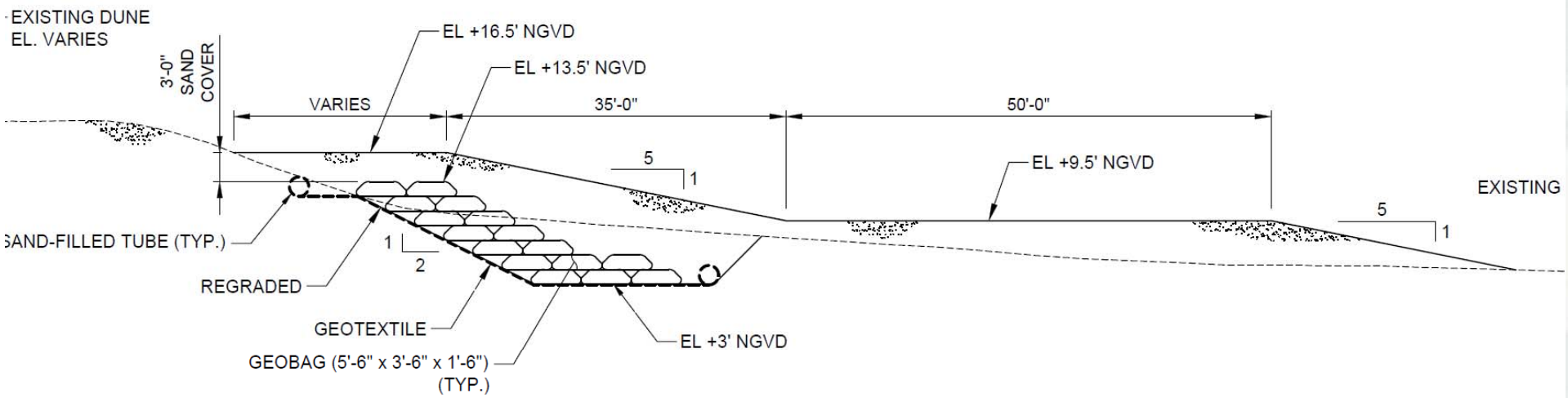

Plan Refinements:

- Beach width increased (50 ft), and beach slope increased (1:5)
- Increases volume of sand required, currently 71,000 CY (51,000 CY trucked in, 20,000 CY from on-site)
- Plan includes beach grass planting & sand fencing

Layout and Construction

- East end project taper has been adjusted to avoid private property concerns (shown on Plan Sheets)
- Construction method –
  - Requires contractor to place excavated, on-site material on top of truck-haul material
  - Approximate thickness of 2 ft

Proposed Public Access

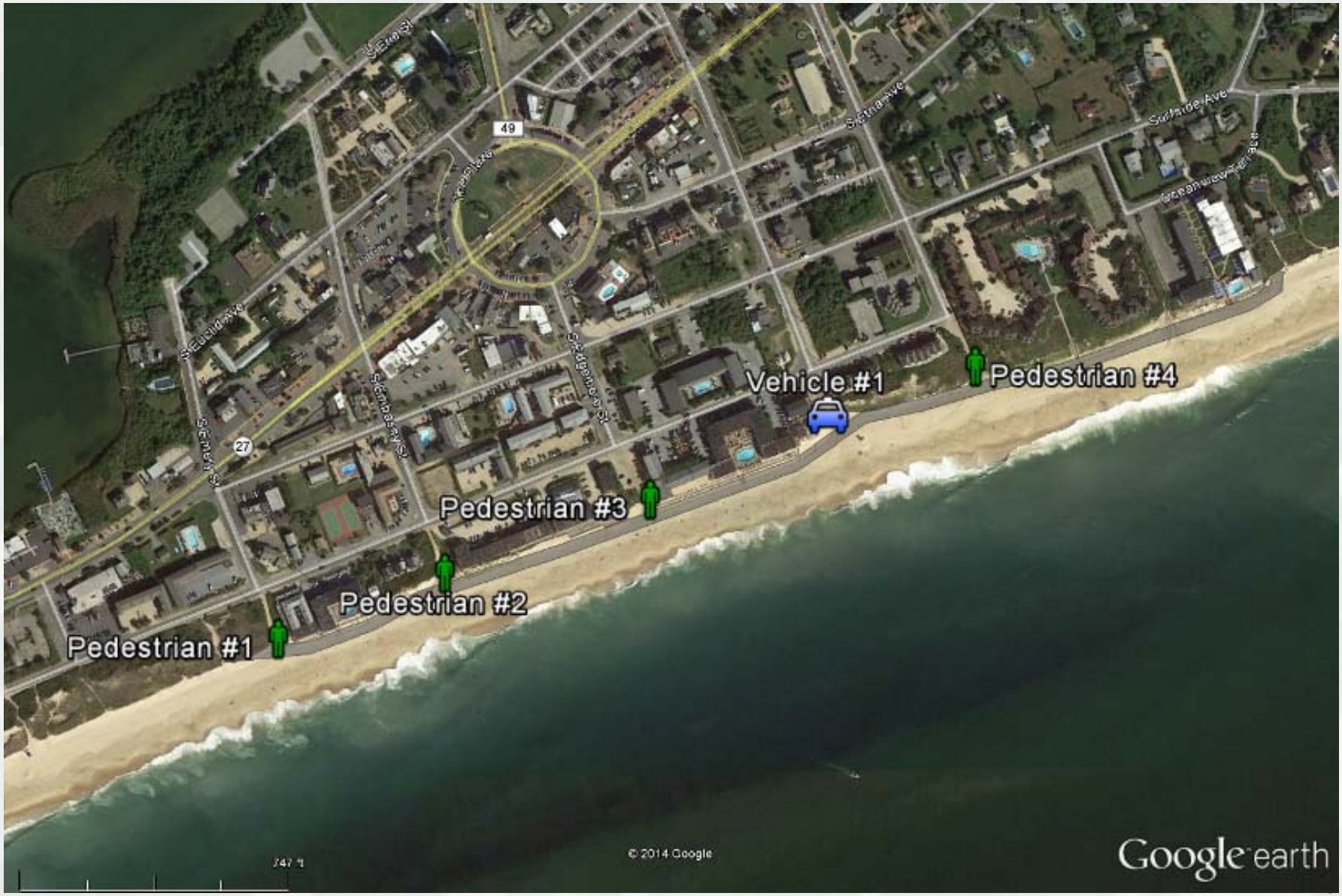

Estimated Cost

Alternative 4: Reinforced Dune - Cost Estimate

Project Length	3,100	ft
Project Life	15	Years
Discount Rate	3.50%	
CRF (First Construction)	0.087	

First Construction Quantities & Costs

Item	**Quantity**		**Parametric Estimate**	
	Number	**Unit**	**Unit Cost**	**Total Cost**
Mob/demob (Hydrualic Fill Eq.)	1	each	$250,000	$250,000
Excavation	20,283	cu.yd.	$3.45	$69,976
Sand Fill (Geobags)	15,146	cu.yd.	$41.08	$622,198
Sand Fill (Dune)	10,154	cu.yd.	$49.47	$502,318
Sand Fill (Berm)	25,700	cu.yd.	$45.27	$1,163,439
Furnish Geobags	14,171	each	$70.00	$991,970
Fill & Place Geobags	14,171	each	$96.86	$1,372,603
Geotextile Filter Layer	24,357	sq.yd.	$6.42	$156,372
Gravel Pedestrian Crossover	4	each	$20,437.00	$81,748
Gravel Vehicular Crossover	4	each	$51,384.00	$205,536
Subtotal				**$5,416,160**
Contingency	23.82%			$1,289,914
Total Construction		**Contigency**		**$6,706,074**
Lands & Damges	$498,800	0.00%		$498,800
E&D	12%	12.82%	$649,939.00	$733,232
S&A	9.39%	12.82%	$508,577.00	$573,754
Total Estimated First Construction Cost				**$8,511,860**

Annualized Costs

Annualized First Costs	$739,043
O&M	$156,784
Total Estimated Annual Average Cost	**$895,827**

Local Sponsor Responsibilities

- Support selected alternative in writing
- Enter into a Local Project Partnership Agreement with DEC
  - Provide local cost share (none anticipated for initial construction)
  - Provide all necessary real estate to build and maintain project
  - Indemnify State and federal governments
  - Operate and maintain the Project
  - Maintain public access to Project area

Real Estate

- If property is privately owned:
  - Obtain perpetual beach easements for all areas where geotextile bags or sand will be placed
- If property is publically owned:
  - Provide access agreement to State to allow State, Corps and their contractors access

Operation and Maintenance

(All O&M work at 100% local sponsor cost)

Administrative:

- Maintain public access to Project area
- Prohibit any excavation, alterations or construction
- Assure no drainage onto the beach
- Remove all trash and debris from beach
- Permit Corps and State access to Project
- Participate in an annual inspection with the Corps and State

Maintenance:

- Grade and reshape dune to original elevations to repair erosion (keep geotextile bags covered)
- Take measures to prevent sand from blowing onto streets and adjacent properties, including sand fencing as needed
- Conduct bi-annual inspections and beach width measurements

Reporting:

- Maintain organized record of activities and costs of inspections and maintenance
- Provide annual report of inspections to Corps and State

Expected Maintenance

- Permit Requirements require keeping bags covered
- Design calls for bags covered with over 3 ft of Sand
- A storm of 5 – 10 yr return period would likely expose bags, depending upon beach condition.
- Engineering Assessment undertaken to better estimate O&M Costs.

Annual costs:

Item	Quantity	Unit Cost	Cost
Dune Fill	2,754 c.y.	$35	$96,396
Patch & Fill GSCs	78 each	$40	$3,118
Replace GSCs	39 each	$370	$14,419
Geotextile Roll	0.5 each	$1,350	$675
Subtotal			***$114,608***
Contingency	7%		$22,922
E&D	7%		$9,627
S&A	7%		$9,627
Total (Annual)			**$157,000**

Downtown Montauk Stabilization
Path Forward

▪ Local Sponsor Concurrence	1 Oct 14
▪ Submit Final HSLRR & EA **Requires Letter of Support*	6 Oct 14
▪ Final Report Approval	20 Oct 14
▪ Ready to Advertise **Requires HQ Approval of Waiver(s)*	28 Oct 14
▪ Water Quality Certificate	31 Oct 14
▪ ASA(CW) Approval to Execute PPA	19 Nov 14
▪ Corps & NYS Execute PPA	9 Dec 14
▪ Real Estate Certification	10 Dec 14
▪ Bid Opening **Requires WQC, PPA, RE Certification*	12 Dec 14
▪ Contract Award	29 Dec 14
▪ Notice To Proceed	16 Jan 15
▪ Project Completion	22 May 15

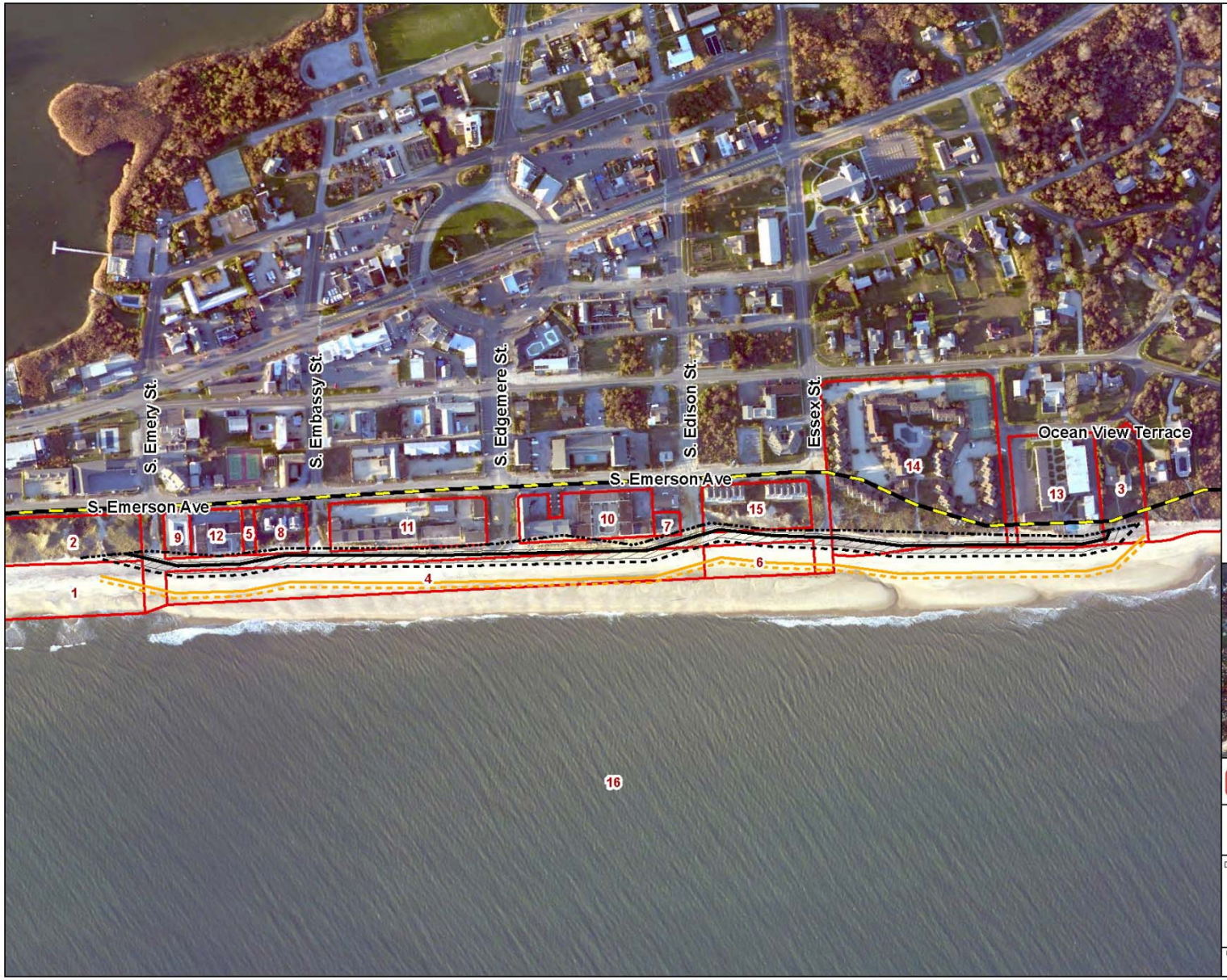

Landward Limit of Fill **DRAFT**
Dune Crest
Dune Toe
Berm Crest
Berm Toe
Geobag Footprint
Parcels with Easements
CEHA

0 50 100 200 Feet

N

Notes

1) Aerial Imagery collected by NOAA on November 14, 2012, as part of "Hurricane Sandy: Rapid Response Imagery of the Surrounding Regions".
2) Landward Limit of Fill is based on profile surveys collected by OSI on October 17, 2013.

DEPARTMENT OF THE ARMY
NEW YORK DISTRICT CORPS OF ENGINEERS
NEW YORK, NY 10278-0090

REFORMULATION STUDY
FIRE ISLAND INLET TO MONTAUK POINT

DRAWING TITLE:

Montauk
Dune Reinforcement

PLATE NO.

DATE:

FILE NAME: Montauk Alternative 4.mxd

Landward Limit of Fill
Dune Crest
Dune Toe
Berm Crest
Berm Toe
Geobag Footprint
MHW
Suffolk County Parcels
Parcels with Easements
Easements
OSI Survey Monuments
OSI Survey
CEHA

DRAFT

N

0 50 100 200 Feet

Notes

1) Aerial Imagery collected by NOAA on November 14, 2012, as part of "Hurricane Sandy: Rapid Response Imagery of the Surrounding Regions".
2) Landward Limit of Fill is based on profile surveys collected by OSI on October 17, 2013.

DEPARTMENT OF THE ARMY
NEW YORK DISTRICT CORPS OF ENGINEERS
NEW YORK, NY 10278-0090

REFORMULATION STUDY
FIRE ISLAND INLET TO MONTAUK POINT

DRAWING TITLE:

Montauk
Dune Reinforcement

PLATE NO. 001

DATE:

FILE NAME: Montauk Alternative 4.mxd

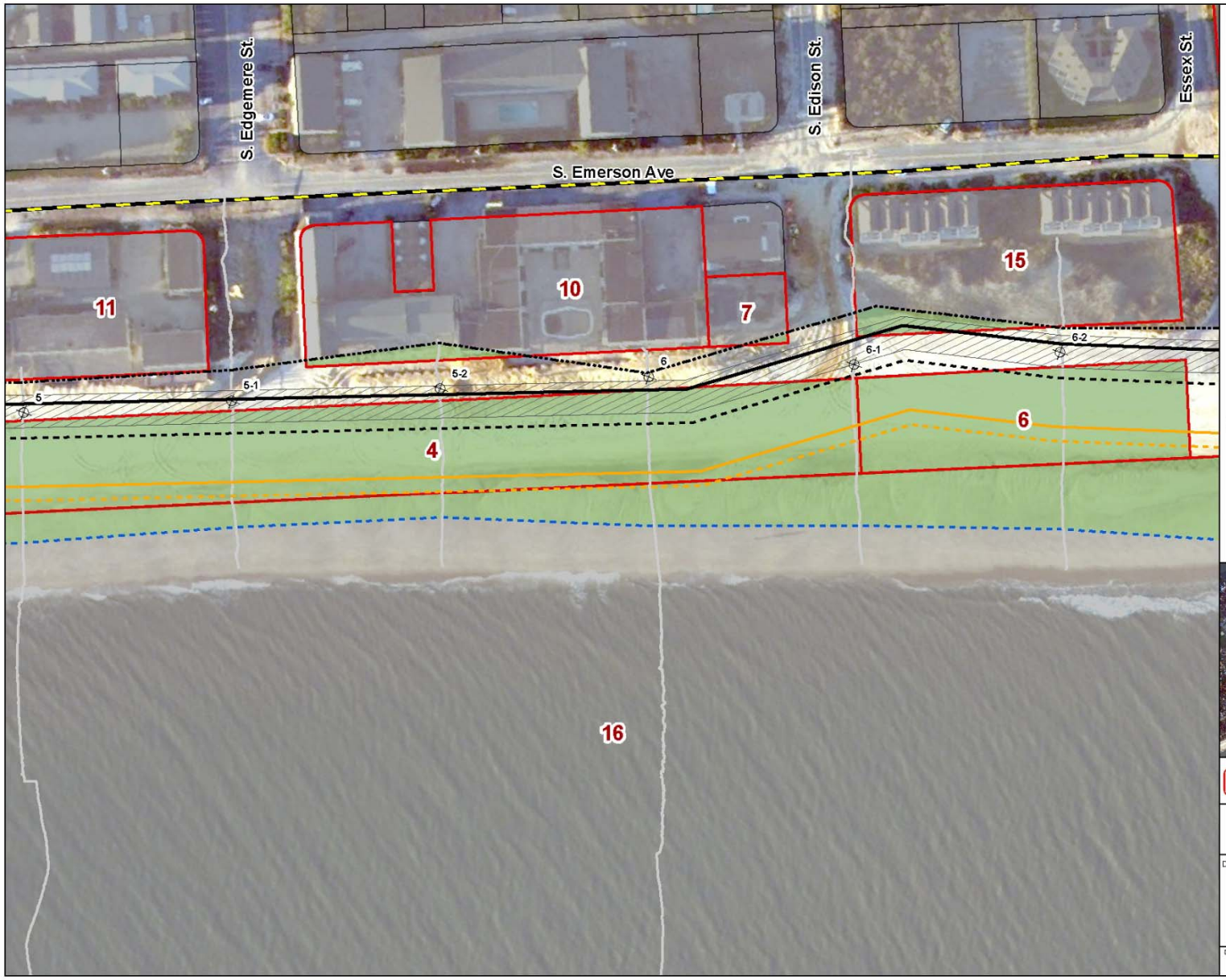

Landward Limit of Fill
Dune Crest
Dune Toe
Berm Crest
Berm Toe
Geobag Footprint
MHW
Suffolk County Parcels
Parcels with Easements
Easements
OSI Survey Monuments
OSI Survey
CEHA

DRAFT

N

0 50 100 200 Feet

Notes

1) Aerial Imagery collected by NOAA on November 14, 2012, as part of "Hurricane Sandy: Rapid Response Imagery of the Surrounding Regions".
2) Landward Limit of Fill is based on profile surveys collected by OSI on October 17, 2013.

DEPARTMENT OF THE ARMY
NEW YORK DISTRICT CORPS OF ENGINEERS
NEW YORK, NY 10278-0090

REFORMULATION STUDY
FIRE ISLAND INLET TO MONTAUK POINT

DRAWING TITLE:

Montauk
Dune Reinforcement

DATE:	FILE NAME:	PLATE NO.
	Montauk Alternative 4.mxd	002

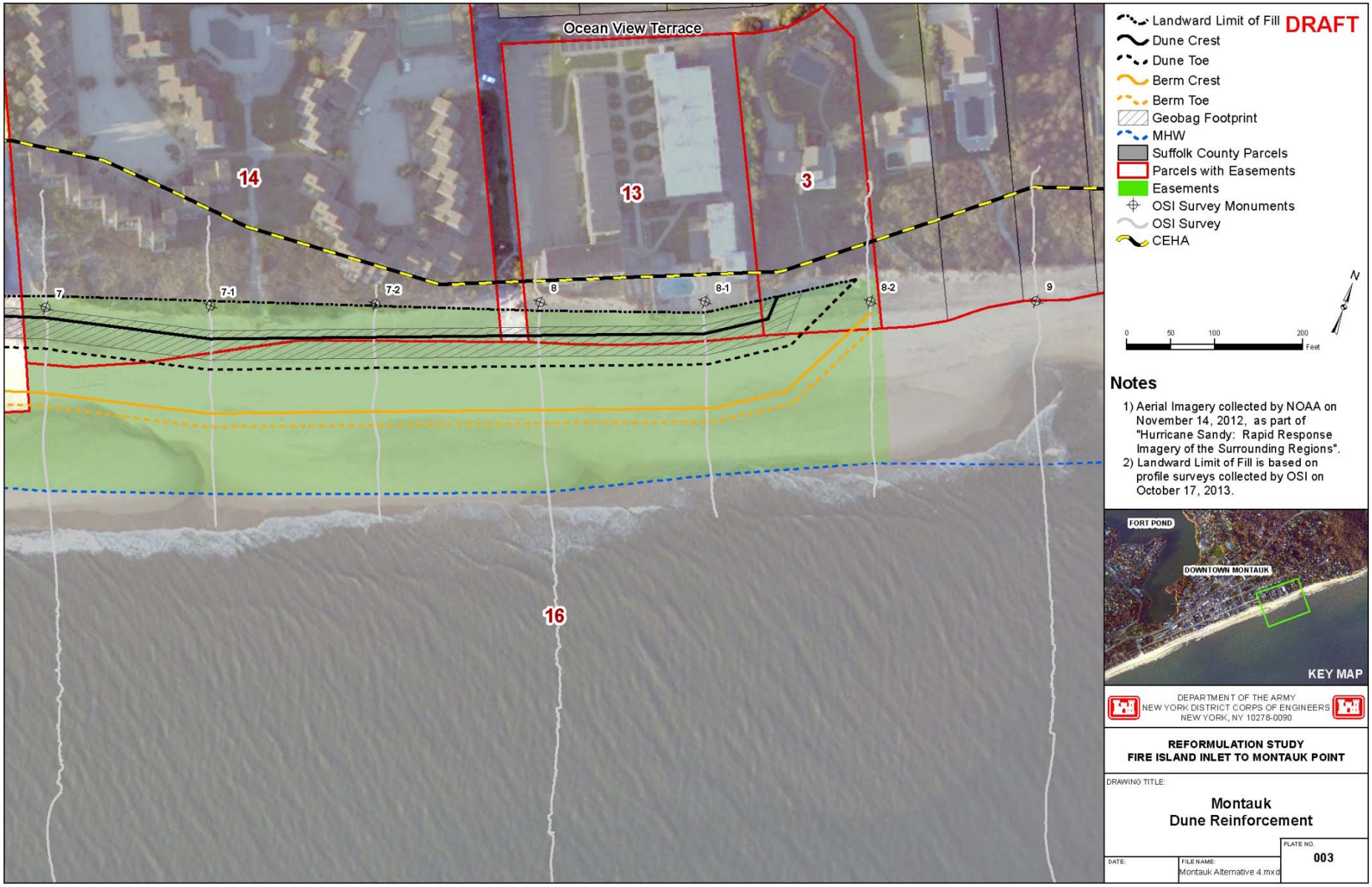
Ocean View Terrace
14
13
3
16
7
7-1
7-2
8
8-1
8-2
9
Landward Limit of Fill
Dune Crest
Dune Toe
Berm Crest
Berm Toe
Geobag Footprint
MHW
Suffolk County Parcels
Parcels with Easements
Easements
OSI Survey Monuments
OSI Survey
CEHA
DRAFT
N
0
50
100
200
Feet
Notes
1) Aerial Imagery collected by NOAA on November 14, 2012, as part of "Hurricane Sandy: Rapid Response Imagery of the Surrounding Regions".
2) Landward Limit of Fill is based on profile surveys collected by OSI on October 17, 2013.
FORT POND
DOWNTOWN MONTAUK
KEY MAP
DEPARTMENT OF THE ARMY
NEW YORK DISTRICT CORPS OF ENGINEERS
NEW YORK, NY 10278-0090
REFORMULATION STUDY
FIRE ISLAND INLET TO MONTAUK POINT
DRAWING TITLE:
Montauk
Dune Reinforcement
PLATE NO.
003
DATE:
FILE NAME:
Montauk Alternative 4.mxd

Landward Limit of Fill
Dune Crest
Dune Toe
Berm Crest
Berm Toe
Geobag Footprint
MHW
Suffolk County Parcels
Parcels with Easements
Easements
OSI Survey Monuments
OSI Survey
CEHA

DRAFT

0 50 100 200 Feet

N

Notes

1) Aerial Imagery collected by NOAA on November 14, 2012, as part of "Hurricane Sandy: Rapid Response Imagery of the Surrounding Regions".
2) Landward Limit of Fill is based on profile surveys collected by OSI on October 17, 2013.

DEPARTMENT OF THE ARMY
NEW YORK DISTRICT CORPS OF ENGINEERS
NEW YORK, NY 10278-0090

REFORMULATION STUDY
FIRE ISLAND INLET TO MONTAUK POINT

DRAWING TITLE:

Montauk
Dune Reinforcement

DATE:

FILE NAME: Montauk Alternative 4.mxd

PLATE NO. 000